OXFORD CAMBRIDGE AND RSA EXAMINATIONS
GCSE

A182/02

TWENTY FIRST CENTURY SCIENCE PHYSICS A/ADDITIONAL SCIENCE A

Modules P4 P5 P6 (Higher Tier)

FRIDAY 12 JUNE 2015: Afternoon

DURATION: 1 hour
plus your additional time allowance

MODIFIED ENLARGED

Candidate forename		Candidate surname	

Centre number						Candidate number				

Candidates answer on the Question Paper.
A calculator may be used for this paper.

OCR SUPPLIED MATERIALS:

None

OTHER MATERIALS REQUIRED:

Pencil
Ruler (cm/mm)

READ INSTRUCTIONS OVERLEAF

DC (ST/FD) 6174295034 114843
© OCR 2015 [Y/601/7514]

INSTRUCTIONS TO CANDIDATES

Write your name, centre number and candidate number in the boxes on the first page. Please write clearly and in capital letters.

Use black ink. HB pencil may be used for graphs and diagrams only.

Answer ALL the questions.

Read each question carefully. Make sure you know what you have to do before starting your answer.

Write your answer to each question in the space provided. Additional paper may be used if necessary but you must clearly show your candidate number, centre number and question number(s).

INFORMATION FOR CANDIDATES

The quality of written communication is assessed in questions marked with a pencil (✎).

A list of useful relationships is printed on pages 4 and 5.

The number of marks is given in brackets [ ] at the end of each question or part question.

The total number of marks for this paper is 60.

Any blank pages are indicated.

BLANK PAGE

TWENTY FIRST CENTURY SCIENCE EQUATIONS

Useful relationships

The Earth in the Universe

distance = wave speed × time

wave speed = frequency × wavelength

Sustainable energy

energy transferred = power × time

power = voltage × current

$$\text{efficiency} = \frac{\text{energy usefully transferred}}{\text{total energy supplied}} \times 100\%$$

Explaining motion

$$\text{speed} = \frac{\text{distance travelled}}{\text{time taken}}$$

$$\text{acceleration} = \frac{\text{change in velocity}}{\text{time taken}}$$

$$\text{momentum} = \text{mass} \times \text{velocity}$$

$$\text{change of momentum} = \text{resultant force} \times \text{time for which it acts}$$

$$\text{work done by a force} = \text{force} \times \text{distance moved in the direction of the force}$$

$$\text{amount of energy transferred} = \text{work done}$$

$$\text{change in gravitational potential energy} = \text{weight} \times \text{vertical height difference}$$

$$\text{kinetic energy} = \frac{1}{2} \times \text{mass} \times [\text{velocity}]^2$$

Electric circuits

$$\text{power} = \text{voltage} \times \text{current}$$

$$\text{resistance} = \frac{\text{voltage}}{\text{current}}$$

$$\frac{\text{voltage across primary coil}}{\text{voltage across secondary coil}} = \frac{\text{number of turns in primary coil}}{\text{number of turns in secondary coil}}$$

Radioactive materials

$$\text{energy} = \text{mass} \times [\text{speed of light in a vacuum}]^2$$

Answer ALL the questions

1 Iggy the cat is sitting next to the bottom of a wall.

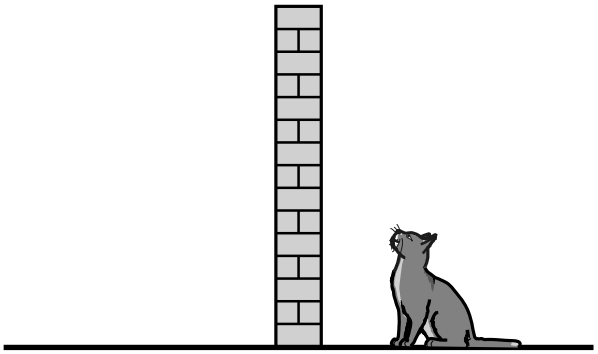

He jumps from the ground onto the wall.
The wall is 1.5 m high and Iggy gains 66 J of gravitational potential energy.

(a) What is Iggy's weight?

Put a ring around the correct answer.

4.4 N

9.9 N

44 N

99 N **[1]**

(b) As Iggy walks along the wall he knocks a tin can off the wall and it falls to the ground.

The tin can weighs 0.2 kg and its velocity just before hitting the ground is 5.1 m/s.

(i) Calculate the momentum of the tin can just before it hits the ground.

momentum _____ kg m/s [1]

(ii) When the tin can hits the ground it takes 0.1 s to stop moving.

Calculate the resultant force acting on the can.

resultant force _____ N [2]

(iii) The tin can took 0.1 s to stop moving because the ground was SOFT.

Explain what effect HARD ground would have had on the resultant force.

_____

_____

_____ **[2]**

(c) George and Kate do an experiment with falling objects.

They use two balls of the same shape and size, but DIFFERENT MASSES.
They release the balls from the same height and find that they take the same time to drop to the floor.

George says 'Because the balls take the same time to drop, this shows that they have the SAME SPEED and KINETIC ENERGY as each other just before hitting the floor.'

Kate says 'But the mass of the ball affects its speed and kinetic energy, so both would be DIFFERENT.'

Comment on their conclusions.
Use equations to justify your answer.

_____

_____

_____

_____ **[3]**

[TOTAL: 9]

2 **Alex goes for a ride on his bike.**

The graph shows how his displacement from the start of his ride changes with time.

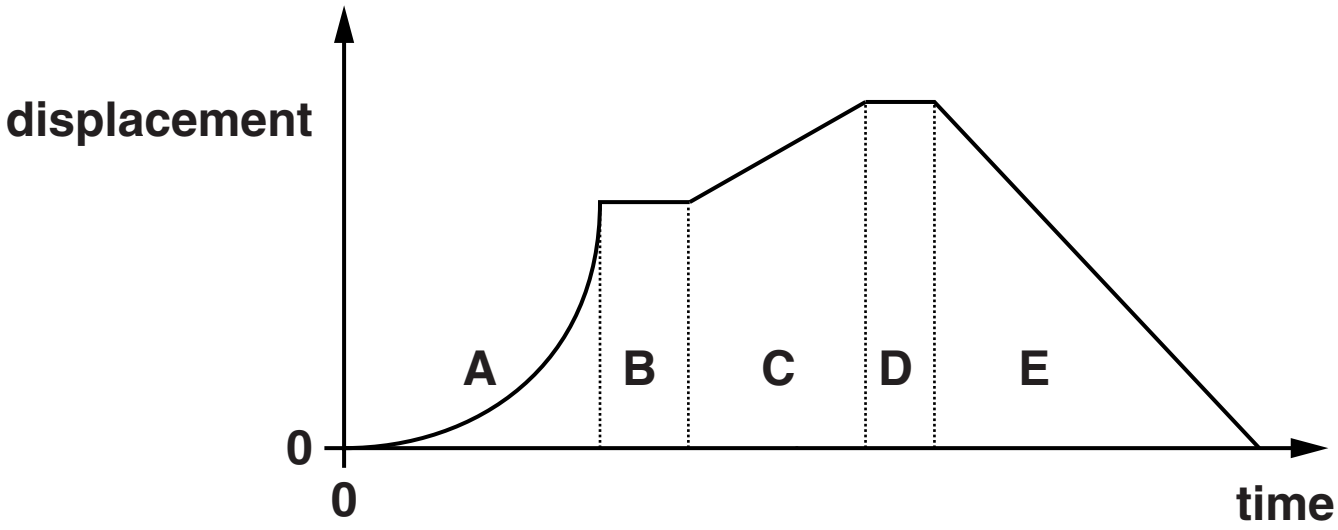

The graph has been divided into five regions, A, B, C, D and E.

(a) Which region or regions show each type of motion?

Put ticks (✓) in the correct box or boxes for each row.

You may tick more than one box in a row.

TYPE OF MOTION	REGION				
	A	B	C	D	E
Stationary					
Moving with constant speed					
Fastest instantaneous speed					

[2]

(b) Which of the following sketch graphs shows Alex's velocity in regions C, D and E?

Put a ring around the correct graph.

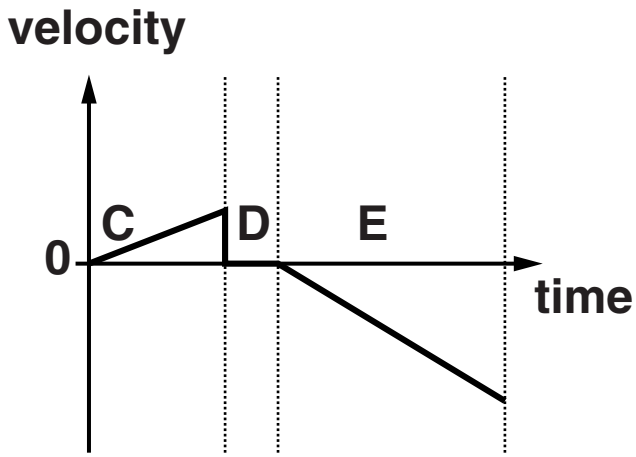

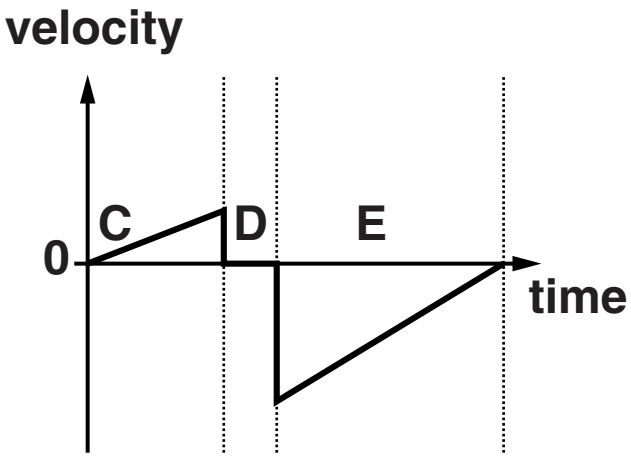

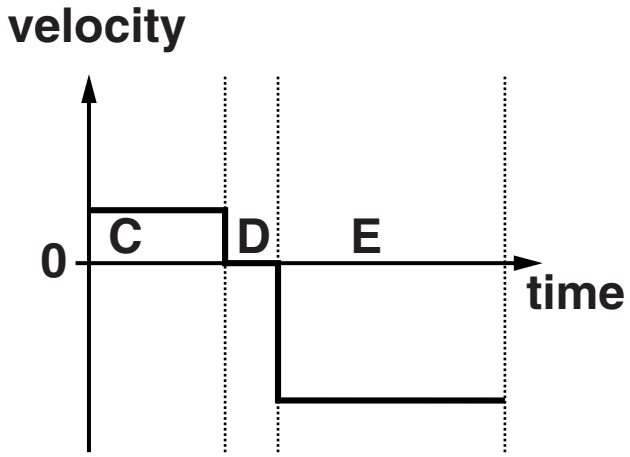

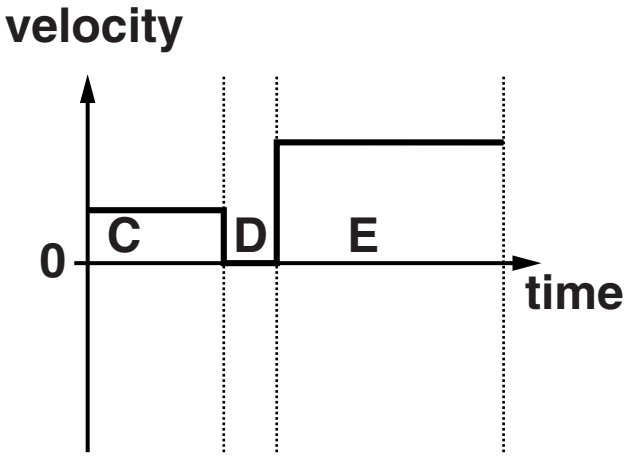

[1]

(c) On the sketch graph below show how Alex's VELOCITY changes with time in region A.

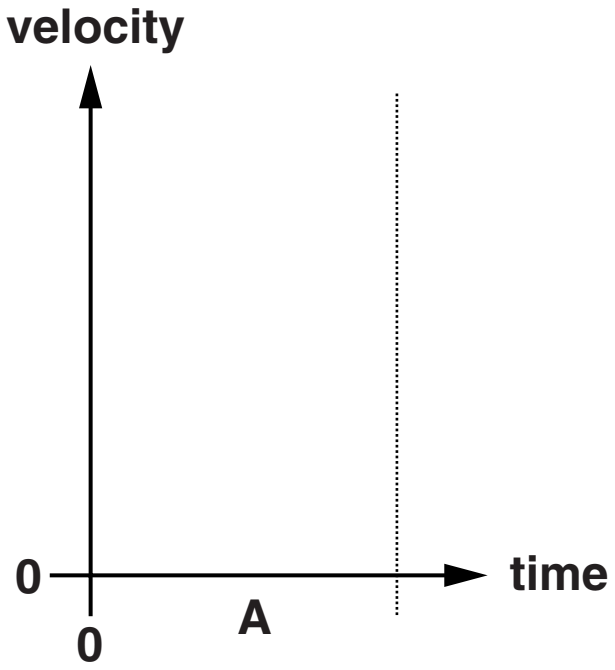

[2]

[TOTAL: 5]

3 This question is about the forces that make a car move forwards.

The rotation of a wheel causes the car to move forward.

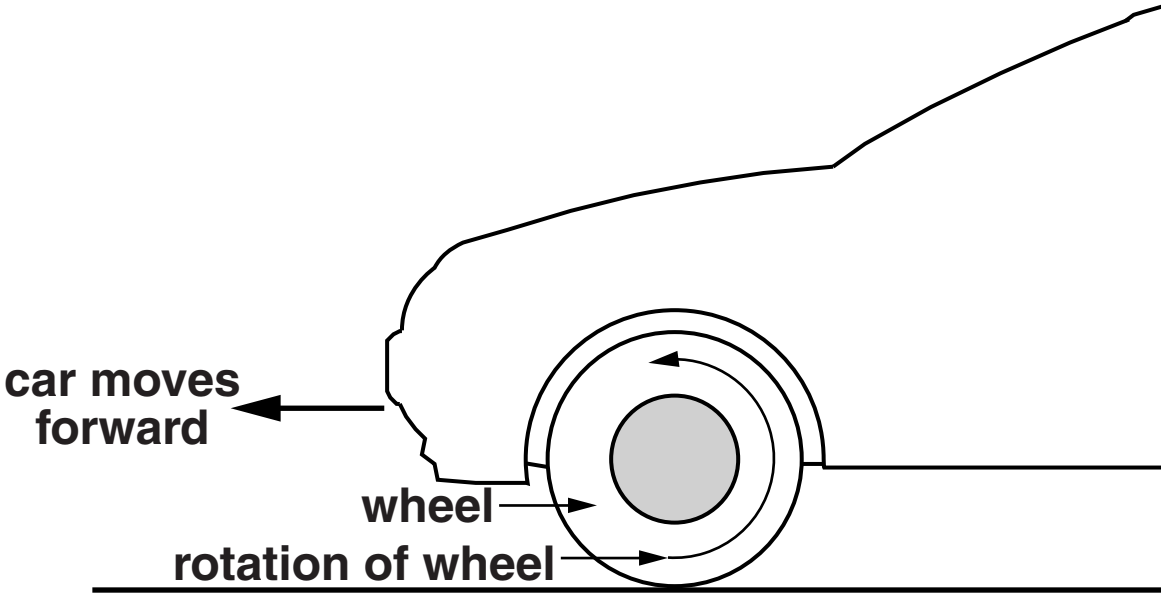

When the road is icy, it is more difficult to get the car moving.

Use ideas about forces to explain how the rotation of a wheel makes the car move forward and why it is more difficult to get the car moving when the road is icy.

You may draw LABELLED arrows on the diagram to help you answer the question.

The quality of written communication will be assessed in your answer.

_____

_____

_____

_____

_____

_____

_____

_____

_____

_____ **[6]**

[TOTAL: 6]

4 Anna is investigating resistors.

(a) She connects a resistor to a battery, an ammeter and a voltmeter to measure the resistance of the resistor.

Complete the circuit that she should use.

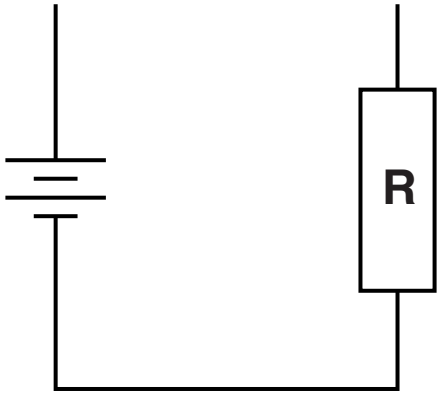

[2]

(b) The current she measures through the resistor, R, in part (a) is 0.2 A.

She then makes changes to her circuit using the same battery and resistor as in part (a).

The following circuits all use resistors and batteries identical to the ones used in part (a).

(i)

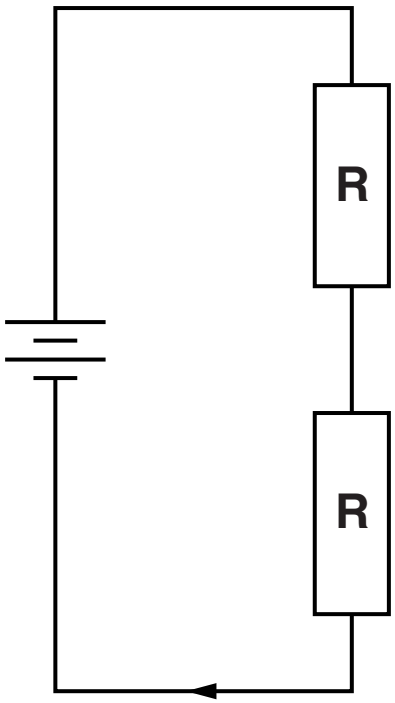

What is current 1?

Put a ring around the correct value.

0.1 A **0.2 A** **0.3 A** **0.4 A**

[1]

(ii)

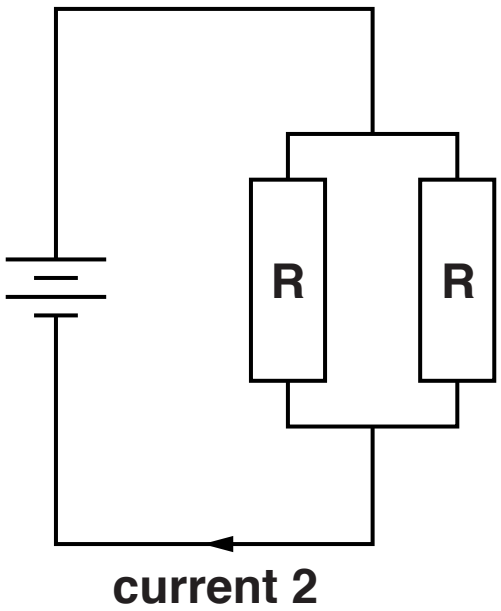

What is current 2?

Put a ring around the correct value.

0.1 A **0.2 A** **0.3 A** **0.4 A**

[1]

(iii)

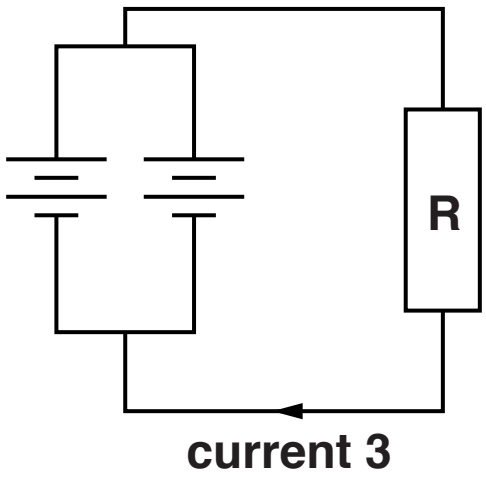

What is current 3?

Put a ring around the correct value.

0.1 A **0.2 A** **0.3 A** **0.4 A**

[1]

(c) Anna sets up the circuit shown using a resistor, an LDR and a battery.

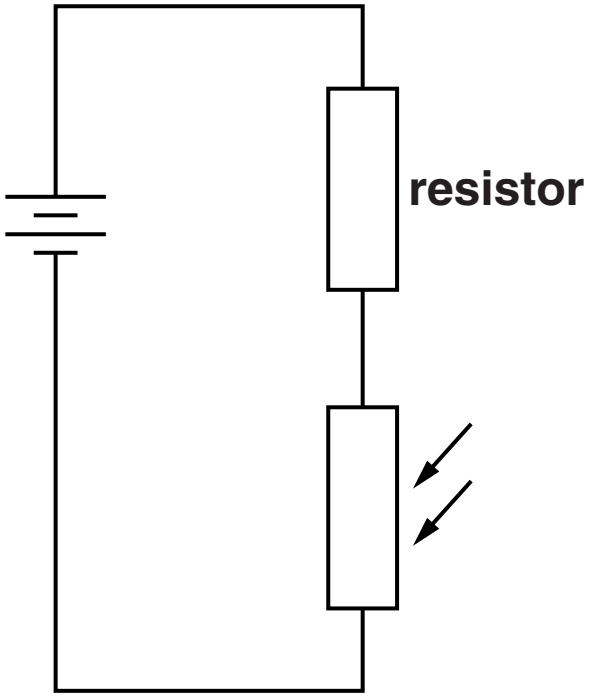

She finds that when she shines a torch on the LDR the voltage across the resistor increases.

Explain why the voltage increases.

_____

_____

_____

_____

_____ [3]

[TOTAL: 8]

BLANK PAGE

5 **Pat and Chris set up an experiment to find the relationship between the current and voltage for a filament lamp.**

When they increase the voltage, the lamp glows brighter.

They record the voltage across the lamp for different values of the current.

Here are their results:

Voltage (V)	**0**	**1.0**	**2.3**	**4.2**	**8.0**
Current (A)	**0**	**0.20**	**0.40**	**0.60**	**0.80**

Pat says: ‘There is no correlation between the voltage and the current.’

Chris says: ‘The resistance of the lamp filament does not change because it is the same piece of wire all the time.’

Comment on their statements.
Use the data to justify your answer.

The quality of written communication will be assessed in your answer.

_____

_____

_____

_____

_____

_____

_____

_____

_____

_____ **[6]**

[TOTAL: 6]

6 Lots of devices use an electric motor.

The diagram shows the main features of a motor.

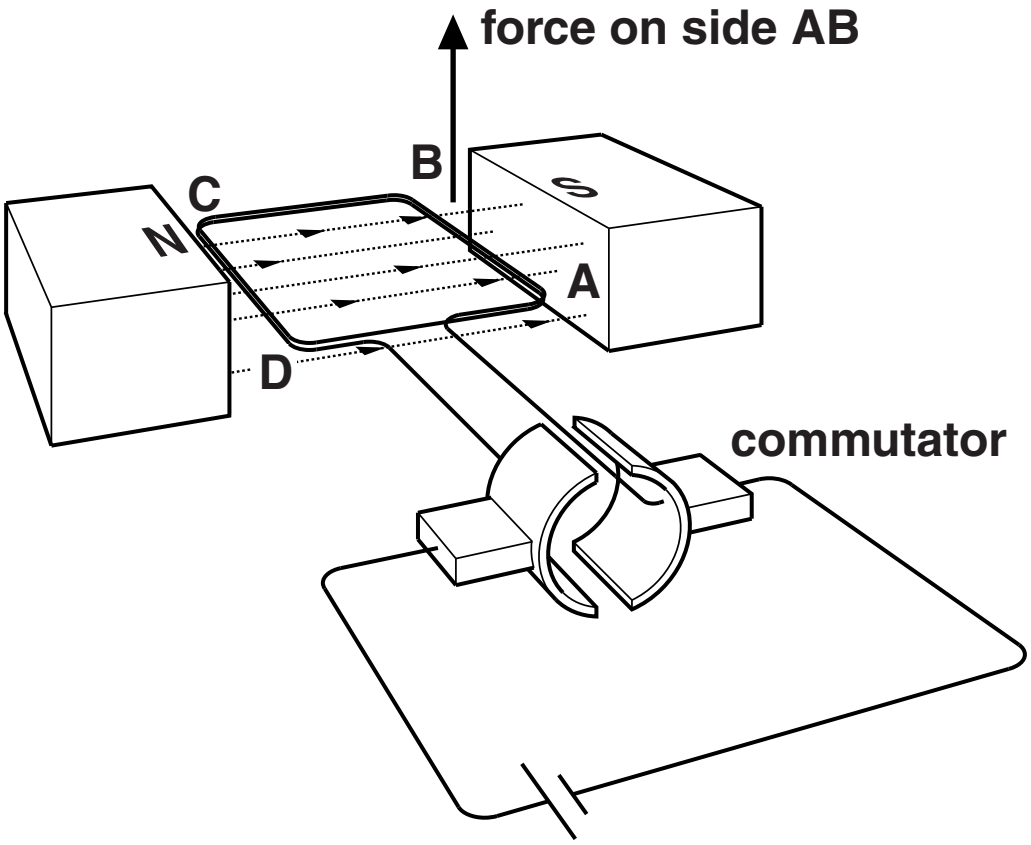

(a) The arrow on the diagram shows the force acting on side AB when a current flows in the coil.

(i) Draw another arrow ON THE DIAGRAM showing the force on side CD. [1]

(ii) Why are there forces on sides AB and CD?

_____

_____

_____ **[2]**

(b) Explain the function of the commutator in this motor.

_____

_____

_____

_____ **[3]**

[TOTAL: 6]

BLANK PAGE

7 A teacher sets up a demonstration experiment. She uses a radioactive source to measure how its activity changes during a lesson.

(a) She handles the radioactive source very carefully to avoid the risk of IRRADIATION and CONTAMINATION.

Explain why contamination from the source is more hazardous than irradiation from the source.

_____

_____

_____

_____ **[2]**

(b) The students record the activity of the radioactive source every minute.

They plotted this graph:

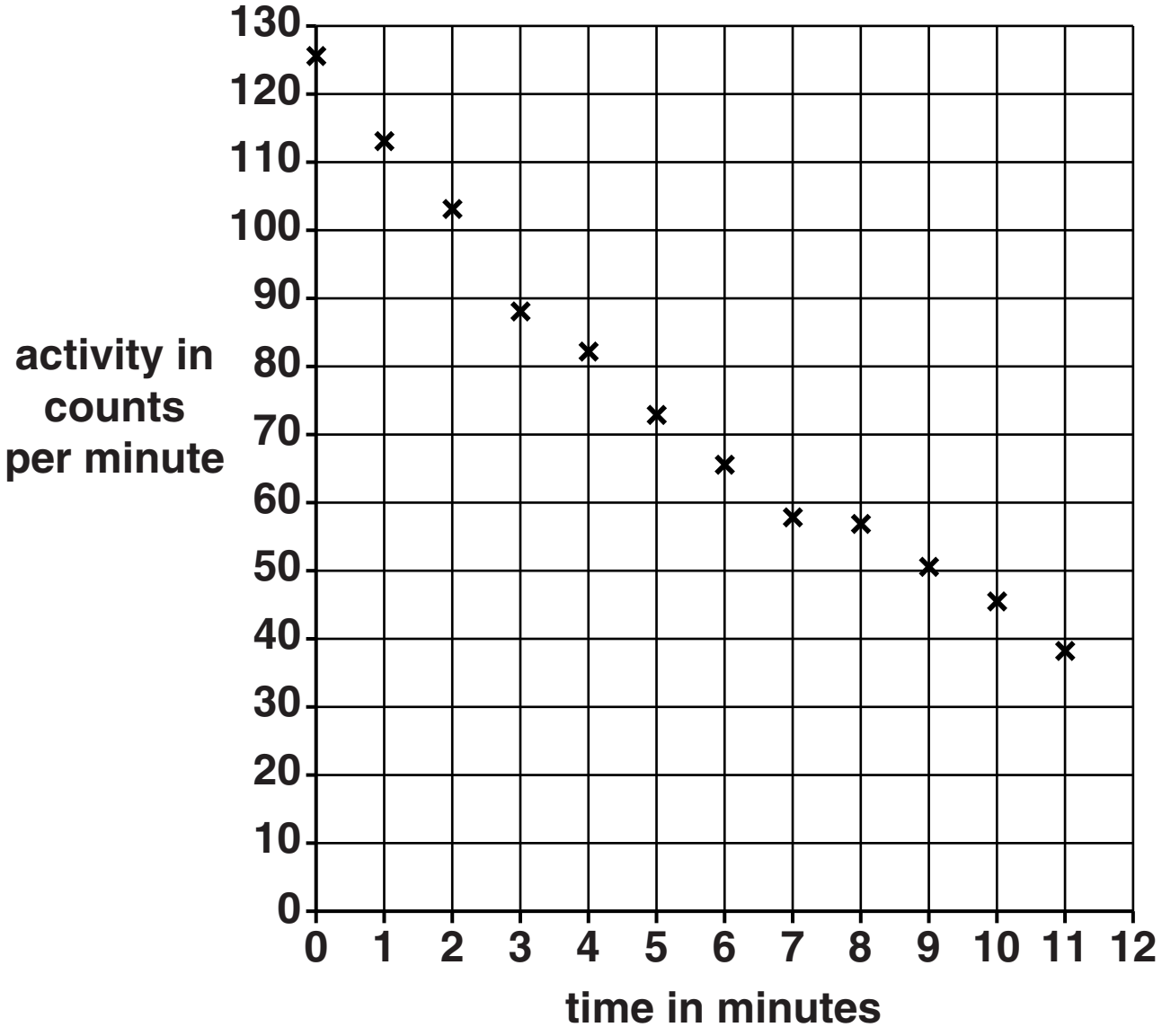

(i) Complete the graph by drawing a curve of best fit to show how the source decays. [1]

(ii) Use the graph to estimate the value for the half-life of the source.

half-life = _____ minutes [1]

(c) Radioactive sources are considered safe when their activity becomes the same as background radiation.

(i) What is background radiation?

_____

_____ **[1]**

(ii) The background radiation in the laboratory is 20 counts per minute.

After how many half-lives could this source be considered safe?

Show your working.

number of half-lives _____ **[2]**

[TOTAL: 7]

8 **The diagram represents nuclear fission that takes place in the fuel rods of a reactor at a nuclear power station.**

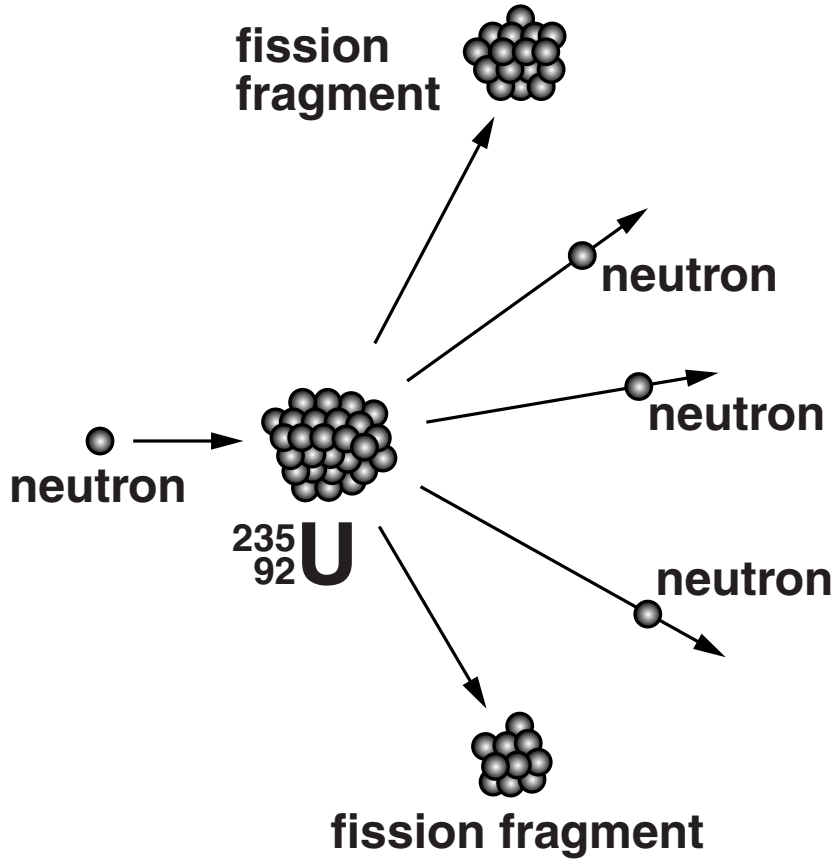

(a) **A nucleus of uranium-235 absorbs a neutron and then splits into two parts and releases a number of neutrons.**

(i) **How does this process produce a CHAIN REACTION?**

_____

_____ **[1]**

(ii) How do the CONTROL RODS in the reactor control the speed of the chain reaction?

_____

_____ [1]

(b) Nuclear power stations produce waste. Some of the waste is radioactive.

Some of these waste products are plutonium-238 (Pu-238) and caesium-135 (Cs-135).

Pu-238 decays to uranium (U) by emitting an alpha particle (α); Cs-135 decays to barium (Ba) by emitting a beta particle (β).

Complete these nuclear decay equations:

$$^{238}_{94}\text{Pu} \longrightarrow \; ^{__}_{__}\alpha + \; ^{__}_{__}\text{U}$$

$$^{135}_{55}\text{Cs} \longrightarrow \; ^{__}_{__}\beta + \; ^{__}_{__}\text{Ba}$$

[3]

(c) Ali lives near the site of a proposed new nuclear power station.

He is very worried about the effects of a nuclear accident.

He knows that the risk of an accident at the power station is much less than the risk when driving his car.

Suggest why Ali is concerned, even though the risk is so low.

_____

_____

_____

_____ **[2]**

[TOTAL: 7]

BLANK PAGE

9 **Priya is going to work in a laboratory where radioactive sources are used.**

She knows that radioactive sources can be dangerous.

Her supervisor has reassured her that the risk is low if she follows the safety procedures.

Here are some safety procedures:

wear disposable gloves
use long-handled tongs to handle the sources
wear a monitoring badge

What are the risks from handling radioactive sources and how do these safety procedures reduce the risks?

The quality of written communication will be assessed in your answer.

_____

_____

_____

_____

_____

_____

_____

_____

_____

_____ **[6]**

[TOTAL: 6]

END OF QUESTION PAPER

BLANK PAGE

BLANK PAGE

OCR
Oxford Cambridge and RSA

Copyright Information

OCR is committed to seeking permission to reproduce all third-party content that it uses in its assessment materials. OCR has attempted to identify and contact all copyright holders whose work is used in this paper. To avoid the issue of disclosure of answer-related information to candidates, all copyright acknowledgements are reproduced in the OCR Copyright Acknowledgements Booklet. This is produced for each series of examinations and is freely available to download from our public website (www.ocr.org.uk) after the live examination series.

If OCR has unwittingly failed to correctly acknowledge or clear any third-party content in this assessment material, OCR will be happy to correct its mistake at the earliest possible opportunity.

For queries or further information please contact the Copyright Team, First Floor, 9 Hills Road, Cambridge CB2 1GE.

OCR is part of the Cambridge Assessment Group; Cambridge Assessment is the brand name of University of Cambridge Local Examinations Syndicate (UCLES), which is itself a department of the University of Cambridge.