OCR
Oxford Cambridge and RSA

CAMBRIDGE NATIONALS

Examiners' report

ENGINEERING MANUFACTURE

J832, J842

R109 January 2019 series

Version 1

Contents

Introduction

Our examiners' reports are produced to offer constructive feedback on candidates' performance in the examinations. They provide useful guidance for future candidates. The reports will include a general commentary on candidates' performance, identify technical aspects examined in the questions and highlight good performance and where performance could be improved. The reports will also explain aspects which caused difficulty and why the difficulties arose, whether through a lack of knowledge, poor examination technique, or any other identifiable and explainable reason.

Where overall performance on a question/question part was considered good, with no particular areas to highlight, these questions have not been included in the report. A full copy of the question paper can be downloaded from OCR.

Paper R109 series overview

This paper covers Levels 1 and 2 of both the Cambridge National Award and the Cambridge National Certificate in Engineering Manufacture. The content of the paper includes questions relating to all four learning outcomes in the specification.

To do well on the paper, candidates needed to have sound knowledge and understanding of engineering materials and processes, and their application in engineering manufacture. They are also required to demonstrate knowledge of developments in engineering processes, and how modern technologies have been applied in engineering production.

Candidates who did well on this paper generally did the following:

- Gave responses that directly addressed the focus of the questions.
- Demonstrated sound knowledge of a wide range of engineering materials.
- Gave fully detailed and justified responses to questions asking for descriptions and/or explanations.
- Demonstrated good knowledge of a range of engineering processes and modern developments in them.
- Demonstrated good quality of communication in the extended response question.

Candidates who did less well on this paper generally did the following:

- Gave no response to a number of questions on the paper.
- Occasionally gave irrelevant responses through not addressing the true focus of questions.
- Showed confusion between types of engineering materials.
- Demonstrated very limited knowledge of engineering processes.
- Gave overly simplistic answers to questions asking for descriptions and/or explanations.
- Demonstrated little quality of written communication in the extended response question.

Most candidates attempted all of the questions on the paper although in some cases a lack of response to questions indicated candidates' limited knowledge of parts of the specification. There was also some evidence that candidates had not read questions carefully enough before answering. It is most important that candidates take the time to read through the question paper before attempting to answer questions. Marks can easily be lost simply by not answering the question as it was asked.

Responses to questions relating to basic engineering materials indicated an area where some improvement is needed. This was equally so with questions dealing with processes widely used in engineering manufacture.

Where candidates are asked to describe or explain processes or procedures, it should be noted that well justified responses are needed. One-word or overly simplistic answers are not suitable responses to this type of question. In many cases candidates were credited only a single mark out of the two or three available on such questions.

Question 1(a)(i)

1 **(a)** Fig. 1 shows a taxi.

Fig. 1

(i) Circle the ferrous metal commonly used to make vehicle bodies such as the taxi.

mild steel **brass** **titanium** **zinc** **[1]**

Most candidates correctly identified mild steel as the ferrous metal commonly used to make vehicle bodies but, in a number of cases, the term 'ferrous' was either not noticed or not fully understood. All three of the other materials were seen as responses to this question, with Titanium being the most frequently used of the three. Some candidates circled two or more of the materials in the hope that one of them might be correct. Where this situation occurs, examiners are unable to award the mark for the question.

Question 1(a)(ii)

(ii) Give **one** property of the material chosen in part **(i)** that makes it suitable for a vehicle body.

.....

..... **[1]**

This question was generally well answered, although a number of candidates of lower ability gave properties that were either not relevant, or were not correct in relation to the material given in part (i). Typical examples of this were the suggestions that mild steel did not rust, or was a lightweight material. Where a candidate had chosen an incorrect material in part (i), but had given a relevant property relating to that material in part (ii), an 'error carried forward' mark was credited for the response.

Exemplar 1

(ii) Give **one** property of the material chosen in part **(i)** that makes it suitable for a vehicle body.

Doesn't rust. Easy to Shape. Light.

..... **[1]**

In the example above, the candidate had actually given three responses. With a 'scatter gun approach' only the first response written can be accepted for marking. This candidate's first response was 'Doesn't rust' and, although the second response of 'Easy to Shape' is correct, no mark could be credited for the question.

Question 1(a)(iii)

(iii) Name **one** other ferrous metal.

..... **[1]**

Most candidates were able to name a ferrous metal, with cast iron, stainless steel and high-speed steel being the most popular responses to this question. A number of lower achieving candidates gave examples of non ferrous metals, such as aluminium or copper, whilst some did not take into account the word 'other' in the question and merely repeated 'steel' from the list of materials in part 1(a)(i).

Question 1(b)(i)

(b) Fig. 2 shows a boat. The hull of the boat is made from Glass Reinforced Plastic (GRP) and is manufactured using a moulding process.

Fig. 2

(i) Circle the term from the list below which describes Glass Reinforced Plastic (GRP).

Ferrous **Non Ferrous** **Smart material** **Composite** **[1]**

This question was well answered by most candidates, although a considerable number thought that Glass Reinforced Plastic (GRP) was a 'Smart material'. Occasionally a response of 'Non Ferrous' was given by candidates with limited knowledge of engineering materials.

Question 1(b)(ii)

(ii) Give **three** properties or characteristics that make GRP a suitable material to use for manufacturing a boat hull.

1 .....

.....

2 .....

.....

3 .....

.....

[3]

This question was quite well answered by candidates that attempted it, and many scored two or more marks for naming appropriate properties or characteristics. Most responses were related to the use of the material for a boat hull, and lightness and water/corrosion resistance were the most regularly seen properties. In addition to this, many candidates referred to the ease of moulding the material into the required shape, although some candidates mistakenly referred to this as malleability.

Question 1(c)(i)

(c) Fig. 3 shows a milk bottle made from a ceramic material.

Fig. 3

(i) Name the material used to make the bottle in Fig. 3.

..... **[1]**

Question 1(c)(ii)

(ii) Give **two** reasons why the material chosen is suitable for the bottle.

1 .....

.....

2 .....

.....

[2]

Most candidates recognised glass as being the ceramic material used to make the bottle shown in Fig. 3 and gave at least one relevant reason for its use. Some lower achieving candidates missed the reference to 'ceramic' in the stem of the question and gave other materials, such as a Thermoplastic or GRP as being suitable. Where a candidate had incorrectly identified the material in part (i), but had given a relevant reason for its use in part (ii), an 'error carried forward' mark was credited for the response.

Question 2(a)

2 A list of engineering materials is given below.

Concrete	**Copper**	**Epoxy Resin**
Nylon	**Phenol Formaldehyde**	**Polyvinyl Chloride (PVC)**

(a) Complete the following table by adding **two** thermoplastics and **two** thermosetting plastics from the list above. Give a different use for each of the materials selected.

Thermoplastic	**Use**
1.	
2.	
Thermosetting Plastic	**Use**
1.	
2.	

[8]

Responses to this question indicated that there was a considerable amount of uncertainty as to which materials are Thermoplastic and which Thermosetting. Only the higher achieving candidates scored full marks on the question, by giving an appropriate use for each correctly positioned material in the table.

It was quite common to see one of each material type under each of the headings in the table. In cases such as this, marking the responses became quite complex, and steps were taken to ensure that candidates were not unreasonably penalised.

Exemplar 2

Thermoplastic	Use
1. Epoxy Resin	Adhesive
2. Polyvinyl chloride	Adhesive/glue
Thermosetting Plastic	**Use**
1. Phenol Formaldehyde	Plug Socket
2. Nylon	Nylon coating

In this example, the candidate has placed two plastics under the correct heading, and two under an incorrect heading. PVC and Phenol Formaldehyde are correctly placed, and an appropriate example of use has been given for the latter. Epoxy Resin and Nylon have been incorrectly placed in the table, but each has been given an appropriate use. Error carried forward marks have been credited for these two uses. This prevents the loss of two marks for one basic error.

Question 2(b)

(b) Blow moulding is one example of a heat process used to shape thermoplastic materials. Name **two** other heat processes used for shaping thermoplastic materials.

1 .....

2 .....

[2]

Most candidates were able to name at least one heat process used for shaping thermoplastic materials, with Injection moulding and vacuum forming being by far the most popular examples. A number of lower ability candidates lost marks on the question by naming processes that were entirely inappropriate, such as casting, forging and laser cutting. In some cases, candidates disappointedly gave no response at all to the question.

Question 3(a)(i)

3 (a) (i) Fig. 4 shows a range of different forms of supply for mild steel.
State the name of each form in the space provided.
One has been done for you.

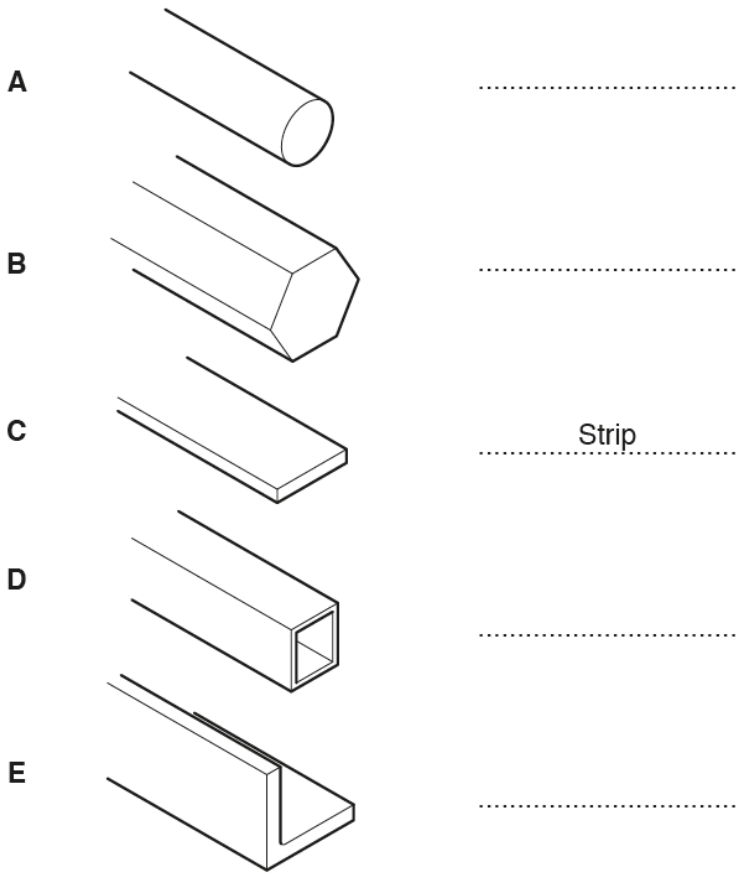

Fig. 4

[4]

Many candidates did not score any marks on the question, and some made no attempt. It was apparent that knowledge of 'forms of supply' of metals was very limited, and most candidates simply made reference to the shapes shown in the diagrams.

Only the higher achieving candidates scored two or more of the four marks available, with the most frequently seen correct responses being 'round bar' and hexagonal bar'. 'Square tube' and 'Angle iron' were also seen, but this was only very occasionally.

Question 3(a)(ii)

(ii) An outdoor bracket which can be used to hold a flower basket is shown in Fig. 5.
The bracket is made from mild steel and has been shaped on the forge.

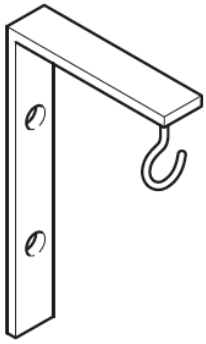

Fig. 5

State which material form in Fig. 4, **A**, **B**, **C**, **D** or **E**, is suitable for the forged bracket.

..... **[1]**

This question was well answered generally, with the correct response of 'C' being given by most candidates. In some cases, however, candidates suggested that 'E' was suitable, presumably as this seemed to be a similar shape to the bracket shown in Fig. 5.

Question 3(b)

(b) Use the terms given below to complete the table to show the correct order of stages in forging the bracket.
Two stages have been done for you.

Place metal on the anvil **Heat the metal in the forge**

Cut metal to required length **Drill holes in bracket for wall fixing**

Allow metal to cool **Hammer the metal to a right angle**

Stage	Process
1	Cut metal to required length
2	
3	
4	
5	
6	Allow metal to cool

[3]

Many candidates scored full marks on this question by giving an appropriate sequence of stages for forging the bracket. Where marks were lost, this was normally as a result of lower ability candidates simply filling in the table with stages in a random and unworkable order.

Question 3(c)

(c) Give **two** reasons why forging the bracket is a more appropriate method than cold bending.

1 .....

.....

2 .....

.....

[2]

Some interesting responses to this question were seen, with most candidates being able to give at least one valid reason for forging the bracket. The most frequently seen reason was the fact that the steel bends more easily when hot, and the potential of the metal fracturing if bent cold was also often mentioned. Some higher achieving candidates also made reference to the strengthening of the bend as a result of grain flow when bending hot.

Question 4(a)

4 Fig. 6 shows a manual vertical milling machine.

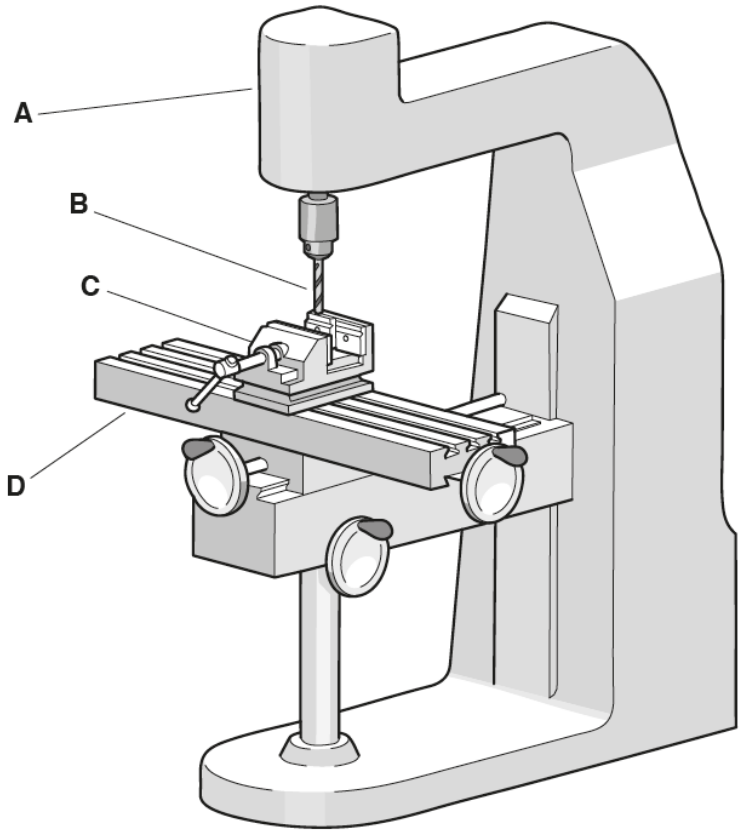

Fig. 6

(a) Name the four parts of the milling machine that have been labelled in Fig. 6.

A .....

B .....

C .....

D .....

[4]

Question 4(b)

(b) State the number of axes of movement on the milling machine shown in Fig. 6.

..... **[1]**

Responses to these questions were quite varied, and detailed knowledge of milling machines appeared to be rather limited. Marks from zero to four were credited to candidates that attempted question 4(a), with B and C being the parts most often correctly named. Part A was correctly identified as the head by some candidates, but part D was invariably referred to as the bed of the milling machine.

In question 4(b), most candidates correctly stated three as the number of axes of movement on the milling machine in Fig. 6. Those candidates who only had limited knowledge of milling machines appeared to answer the question by guesswork, and numbers from 1 to 6 appeared quite frequently.

Question 4(c)

(c) Milling machines can be used for drilling.
State **two** other operations a milling machine can carry out.

1 .....

.....

2 .....

.....

[2]

Very few candidates scored well on this question. Rather than stating the operations carried out on the milling machine, most candidates chose to describe what was being done. Two operations that were seen quite often were boring and groove cutting, but rarely were two appropriate operations seen together. Many candidates seemed to think that lathe work operations like turning and knurling were also carried out on milling machines, further confirming that detailed knowledge of the machine was rather limited.

Question 4(d)

(d) State **three** safety checks that should be carried out on a milling machine before switching the machine on.

1 .....

.....

2 .....

.....

3 .....

.....

[3]

This question was well answered by many candidates. Where appropriate responses were given, these normally related to the use of safety guards and checking the tightness of tools and workpieces in their toolholders and vices. Some candidates missed the real focus of the question, however, and gave PPE precautions rather than machine safety checks. This was a typical example of a situation where marks are easily lost by simply not reading the question carefully enough before answering.

Question 5(a)(i)

5 **(a)** Laser welding is one type of welding.

(i) Give **one** example of where laser welding may be used.

.....

..... **[1]**

Most candidates were able to give one example of where laser welding may be used, and credit was given for any appropriate use. A number of examples were too vague to qualify for a mark, a typical example of this being 'cars', and some candidates confused the process with laser cutting. Quite a significant number of candidates did not attempt to answer the question at all.

Question 5(a)(ii)

(ii) Name **one** other type of welding.

..... **[1]**

This question was generally well answered, and most candidates were able to name one other type of welding. Of the different types seen in responses to the question, MIG, TIG and Arc were the most popular, with gas welding only occasionally being mentioned. Some lower achieving candidates repeated 'laser welding' from part (i), whilst others gave vague responses like 'heat welding' and 'metal welding'.

Question 5(a)(iii)

(iii) State **two** PPE precautions that should be taken when welding.

1 .....

.....

2 .....

.....

[2]

Many candidates spotted the letters PPE and immediately gave the usual answers of 'apron', 'goggles' and 'tie back hair'. The focus of the question was specific to welding and the precautions given needed to be suitably justified.

Exemplar 3

(iii) State **two** PPE precautions that should be taken when welding.

1. wear goggles

2 wear overalls

[2]

In this example, the candidate has given vague responses that could so easily have been made into mark scoring answers. Credit was only given where references to the heat and extreme light were made, and in this case 'Welding googles' and 'Fireproof overalls' would have been credited full marks.

Question 5(b)

(b) Give **two** benefits of using Computer Aided Design (CAD) to create a model prior to going into full scale production.

1 .....

.....

2 .....

.....

[2]

This question was quite well answered generally, with most candidates able to give at least one valid benefit of using CAD to create a model prior to production. Most responses were based around the ease of making changes to designs in CAD, and the ability to share designs digitally around the world. References to modelling and on-screen simulation also appeared in responses from higher ability candidates. Where marks were lost on the question, this was normally due to responses being too vague or overly simplistic.

Question 5(c)

(c) Describe a rapid prototyping process that could be used to make a 3D prototype.

.....

.....

.....

.....

.....

..... **[4]**

Some interesting answers to this question were seen, most of them based on either 3D printing or SLS. Many candidates scored well on the question, but only a limited number scored full marks. The descriptions of the processes were generally quite detailed, whether it be 3D printing or SLS, but very few made specific reference to the computer control of the process. Other reasons for loss of marks were a failure to make mention of the CAD software, and the lack of reference to the layering of the 3D model. Weaker candidates either gave no response to the question at all, or simply gained one mark for naming the process.

Question 6(a)(i)

6 **(a)** Describe the impact made by modern technology on the following:

(i) The workforce

.....

.....

.....

..... **[2]**

Question 6(a)(ii)

(ii) The product

.....

.....

.....

..... **[2]**

Most candidates showed good awareness of the impact of the use of modern technology in engineering manufacture, with many scoring well on both parts of the question.

In part (i) responses tended to concentrate on the loss of jobs in the workplace as a result of CNC machines and robots taking over the tasks. This was often followed up by reference to the need for some workers to retrain for more specialised jobs on the new machines. Only higher achieving candidates mentioned the safer working environment, and the reduction in manual tasks for workers.

In part(ii) the improvements in quality and output of products was the main focus of most responses, with accuracy and consistency also referenced in the more detailed answers. Most candidates attributed the improvements to the reduction of human error during manufacturing, and some suggested that this might lead to improved sales and profits. A number of the higher achieving candidates also mentioned the cost savings produced by a reduction in wastage of time and materials.

Question 6(b)

(b)* Discuss the advantages and disadvantages of modern technology in engineering production when compared with more traditional processes.

.....

.....

.....

..... **[6]**

This type of question is used to assess the candidates' quality of written communication (QWC), and requires them to present a detailed and reasoned discussion on the topic that forms the focus of the question.

A number of candidates seemed to think that this question was merely an extension of part (a) and missed the fact that the main focus of the question was on 'advantages and disadvantages'. They were also expected to make comparisons with more traditional processes. Whilst many did discuss advantages and disadvantages of modern technology, few made any real reference to traditional processes.

Most candidates who attempted the question scored quite well, with some of the higher achieving candidates gaining a good level three mark. Where marks were lost, this was normally as a result of candidates failing to develop some of the points made in the response. Some of the lower ability candidates concentrated more on the loss of traditional skills than on the use of modern technology, and a number of them restricted the mark possible by presenting their responses as a series of bullet points.

Supporting you

For further details of this qualification please visit the subject webpage.

Review of results

If any of your students' results are not as expected, you may wish to consider one of our review of results services. For full information about the options available visit the OCR website. If university places are at stake you may wish to consider priority service 2 reviews of marking which have an earlier deadline to ensure your reviews are processed in time for university applications.

Active Results offers a unique perspective on results data and greater opportunities to understand students' performance.

It allows you to:

- Review reports on the **performance of individual candidates**, cohorts of students and whole centres
- **Analyse results** at question and/or topic level
- **Compare your centre** with OCR national averages or similar OCR centres.
- Identify areas of the curriculum where students excel or struggle and help **pinpoint strengths and weaknesses** of students and teaching departments.

http://www.ocr.org.uk/administration/support-and-tools/active-results/

Attend one of our popular CPD courses to hear exam feedback directly from a senior assessor or drop in to an online Q&A session.

https://www.cpdhub.ocr.org.uk

The small print

We'd like to know your view on the resources we produce. By clicking on the 'Like' or 'Dislike' button you can help us to ensure that our resources work for you. When the email template pops up please add additional comments if you wish and then just click 'Send'. Thank you.

Whether you already offer OCR qualifications, are new to OCR, or are considering switching from your current provider/awarding organisation, you can request more information by completing the Expression of Interest form which can be found here: www.ocr.org.uk/expression-of-interest

OCR Resources: *the small print*
OCR's resources are provided to support the delivery of OCR qualifications, but in no way constitute an endorsed teaching method that is required by OCR. Whilst every effort is made to ensure the accuracy of the content, OCR cannot be held responsible for any errors or omissions within these resources. We update our resources on a regular basis, so please check the OCR website to ensure you have the most up to date version.

Our documents are updated over time. Whilst every effort is made to check all documents, there may be contradictions between published support and the specification, therefore please use the information on the latest specification at all times. Where changes are made to specifications these will be indicated within the document, there will be a new version number indicated, and a summary of the changes. If you do notice a discrepancy between the specification and a resource please contact us at: resources.feedback@ocr.org.uk.

OCR acknowledges the use of the following content: Page 5 - Fig. 1 © mikecphoto / Shutterstock.com, Page 6 - Fig. 2 © IvanRiver / Shutterstock.com, Page 7 - Fig. 3 © foodonwhite, Shutterstock, www.shutterstock.com, Square down and Square up: alexwhite/ Shutterstock.com

Please get in touch if you want to discuss the accessibility of resources we offer to support delivery of our qualifications: resources.feedback@ocr.org.uk

Looking for a resource?

There is now a quick and easy search tool to help find **free** resources for your qualification:

www.ocr.org.uk/i-want-to/find-resources/

www.ocr.org.uk

OCR Customer Support Centre

Vocational qualifications

Telephone 02476 851509
Facsimile 02476 851633
Email vocational.qualifications@ocr.org.uk

OCR is part of Cambridge Assessment, a department of the University of Cambridge. *For staff training purposes and as part of our quality assurance programme your call may be recorded or monitored.*

Cambridge Assessment

CERTIFIED ISO 9001

UKAS MANAGEMENT SYSTEMS 001